2.4Ghz LED Strip Receiver

PRODUCT SPECIFICATIONS

Material: Plastic

Colour: White

LED Strip Type: All LED Strip

No. of Channels: 4

Input Voltage: 12v DC or 24v DC

Output Power: 4x 5A (240w/480w)

IP Rating: IP20

Dimmable: Yes (5% - 100%)

Warranty: 2 Years Replacement**

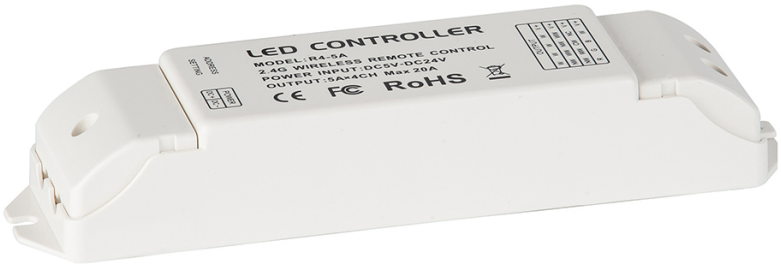

DIMENSIONS

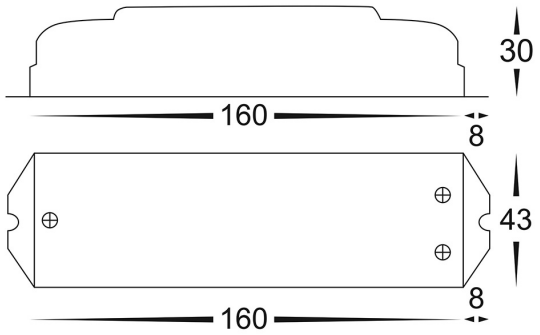

COMPATIBLE WITH

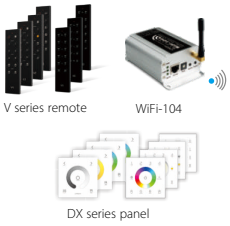

IP RATING

OPERATING INSTRUCTIONS

Match code with V series remote, DX series touch panel, WiFi-104 gateway.

1. Short press "ID learning button" on driver, the lamps changed from flicker to keep on, please complete next step within 10s.
2. Match up with V series remote: Press any key (single zone remote) or zone key (multi-zone remote).
3. Match up with DX series panel: Press any key (single zone panel) or zone key (multi-zone panel).
4. Match up with 104 gateway: Select zone number on App, then touch the color slide for 2-3 seconds.
5. If the lamp flicker several times, match successfully.

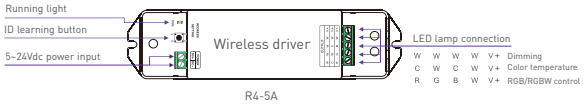

Product Ordering

IMAGE	PART NUMBER
	HV9103-R4-5A

SAMPLE INSTALLATION DIAGRAM

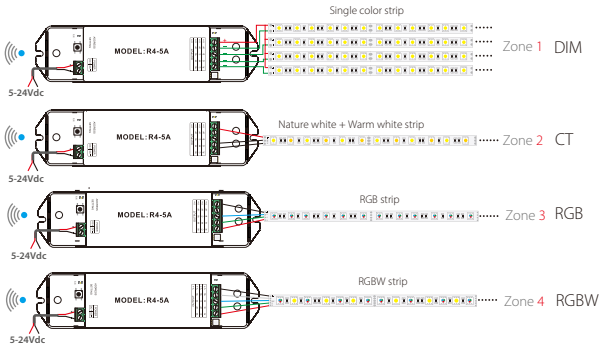

** See Warranty Terms and Conditions for more information

For more information contact Havit Lighting

ADDRESS:
143 Beauchamp Road
Matraville NSW 2036
Australia

Tel: 02 9381 8300
Fax: 02 9666 8881
Email: sales@havit.com.au
web: www.havit.com.au

Updated 14-01-2020