CERTECH
CERTIFIED TECHNOLOGIES

DUPLEX FIBRE LEAD SC/APC TO SC/APC, LSZH

Technical Overview

CERTECH OS2 SCA to SCA Duplex Fibre Leads provide a high-performance, individually factory tested patching solution for structured cabling, FTTP, and network backbone applications.

Constructed using G.657.A1 bend-insensitive Singlemode fibre, the cable maintains low attenuation and stable optical performance. The Duplex 2.0mm tight-buffered construction incorporates 900µm buffered fibres and aramid yarn strength members, supporting flexible routing, reliable installation in high-density indoor environments while improving occupancy safety with a Low Smoke, Zero Halogen Sheath (LSZH).

SC/APC connectors ensure consistent end-face geometry, delivering low insertion loss and high return loss for stable optical performance across network links. Duplex configuration supports transmit and receive channels within a single cable, enabling efficient patching and cross-connect applications.

Each lead is factory tested to ensure consistent performance, compliance with relevant industry standards and long-term reliability.

Standards

AS/CA S008	Australian Manufacturing Requirements
AS/CA S009	Installation Requirements for Customer Cabling
AS 11801 Series	Australian Performance Standard
AS/NZS 14763.3	Australian Fibre Testing Standard
IEC 61754 Series	Fibre Connector Interface Geometry
IEC 61300 Series	Fibre Connector Performance Testing
IEC 61753	Fibre Component Performance Standard
ITU-T G.652.D	Singlemode Fibre Manufacturing Performance
ITU-T G.657.A1	Bend Insensitive Fibre Standard

Product

Product Code
FLSCASCAOS20.5 (0.5m)
FLSCASCAOS21 (1m)
FLSCASCAOS21.5 (1.5m)
FLSCASCAOS22 (2m)
FLSCASCAOS23 (3m)
FLSCASCAOS25 (5m)
FLSCASCAOS27 (7m)
FLSCASCAOS210 (10m)
FLSCASCAOS215 (15m)
FLSCASCAOS220 (20m)
FLSCASCAOS225 (25m)
FLSCASCAOS230 (30m)
FLSCASCAOS235 (35m)
FLSCASCAOS240 (40m)
FLSCASCAOS245 (45m)
FLSCASCAOS250 (50m)
FLSCASCAOS260 (60m)
FLSCASCAOS270 (70m)
FLSCASCAOS280 (80m)
FLSCASCAOS290 (90m)

Description
Duplex Fibre Lead
SC/APC to SC/APC, LSZH

CERTECH
CERTIFIED TECHNOLOGIES

DUPLEX FIBRE LEAD
SC/APC TO SC/APC, LSZH

Features

- G.657.A1 Bend-insensitive fibre
- SC/APC connectors for optimum end face mating quality
- Duplex construction supporting transmit and receive channels
- 2.0mm Tight-buffered cable for flexible & high-density routing
- 900µm Buffered fibres with aramid yarn reinforcement
- LSZH Sheath for occupancy safety
- Low attenuation for stable optical performance across network links
- Optimised for O–E–S–C–L band transmission (1260-1625nm)
- 100% Individually factory tested for performance assurance and reliability
- APCO aligned recyclable packaging

Technical Specifications

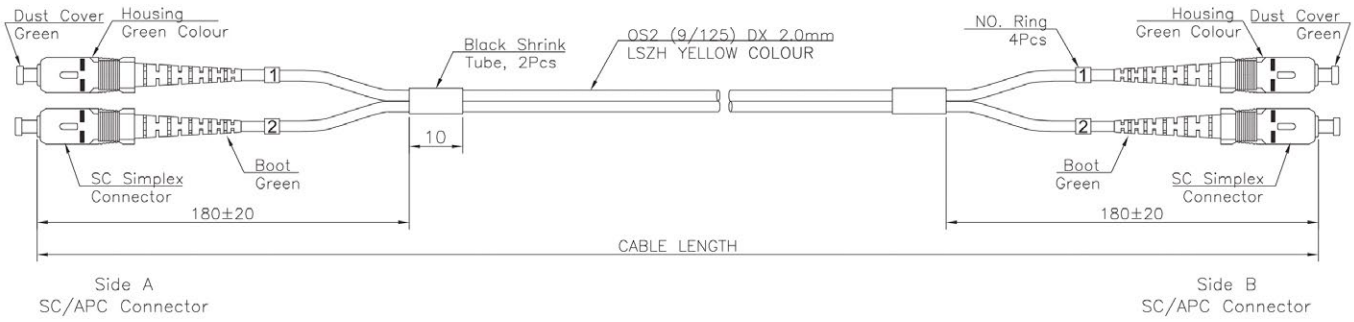

CERTECH
CERTIFIED TECHNOLOGIES

DUPLEX FIBRE LEAD SC/APC TO SC/APC, LSZH

Technical Specifications

Construction

1. **Optical Fibre:** 900um OS2 9/125 G.657.A1
2. **Aramid Yarn**
3. **Out Jacket:** LSZH
   Sheath Thickness: 0.35±0.05mm
   Diameter: (1.9±0.05)∗(3.9±0.1)mm
   Colour: Yellow, PMS 122C
4. **Cable Mark:** Fibre Optical Cable SM 9/125 OS2 G.657.A1 2.0mm - LSZH - MM/YY ∗∗∗∗∗M

Parameters of Fibre

Optical Fibre Type	Unit	OS2-G657.A1
Waveband	nm	1310/1550
Attenuation	dB/Km	0.4/0.3

Product Parameters

Performance	Long-Term	Short-Term
Max. Tension (N)	120	225
Max. Crush Resistance (N/100mm)	100	500
Min. Bend Radius	30D (Dynamic)	15D (Static)
Storage and Operating Temperature	-10°C ~ +60°C	

CERTECH CERTIFIED TECHNOLOGIES

DUPLEX FIBRE LEAD SC/APC TO SC/APC, LSZH

Technical Specifications

Optical Characteristics

Parameter	Conditions	Value	Units
Attenuation	1310 nm	≤0.35	dB/km
	1383 nm (after H_2-aging)	≤0.35	dB/km
	1460 nm	≤0.25	dB/km
	1550 nm	≤0.21	dB/km
	1625 nm	≤0.23	dB/km
Attenuation vs Wavelength (Max. Δ)	1285-1330 nm	≤0.03	dB/km
	1525-1575 nm	≤0.02	dB/km
Dispersion Coefficient	1285-1340 nm	-3.0 to +3.0	ps/(nm·km)
	1550 nm	≤18	ps/(nm·km)
	1625 nm	≤22	ps/(nm·km)
Zero Dispersion Wavelength	—	1312 ± 10	nm
Zero Dispersion Slope	—	≤0.090	ps/(nm²·km)
Zero Dispersion Slope (Typical)	—	0.086	ps/(nm²·km)
PMD (Maximum Individual Fibre)	—	≤0.2	ps/√km
PMD (Link Design Value)	M=20, Q=0.01%	≤0.1	ps/√km
PMD (Typical)	—	0.04	ps/√km
Cable Cut-off Wavelength	—	≤1260	nm
Mode Field Diameter	1310 nm	9.0 ± 0.4	µm
	1550 nm	10.1 ± 0.5	µm
Effective Group Index	1310 nm	1.466	—
	1550 nm	1.467	—
Point Discontinuities	1310 nm	≤0.05	dB
	1550 nm	≤0.05	dB

Environmental Characteristics (1310, 1550 & 1625 nm)

Parameter	Conditions	Value	Units
Temperature Dependence	-60°C to +85°C	≤0.05	dB/km
Temperature & Humidity Cycling	-10°C to +85°C, 98% RH	≤0.05	dB/km
Water Soak Dependence	23°C, 30 days	≤0.05	dB/km
Damp Heat Dependence	85°C, 85% RH, 30 days	≤0.05	dB/km
Dry Heat Aging	85°C	≤0.05	dB/km

CERTECH CERTIFIED TECHNOLOGIES

DUPLEX FIBRE LEAD SC/APC TO SC/APC, LSZH

Technical Specifications

Geometrical Characteristics

Parameter	Conditions	Value	Units
Cladding Diameter	—	124.8 ± 0.7	µm
Cladding Non-Circularity	—	≤0.7	%
Coating Diameter	—	245 ± 5	µm
Coating-Cladding Concentricity Error	—	≤12.0	µm
Coating Non-Circularity	—	≤6.0	%
Core-Cladding Concentricity Error	—	≤0.5	µm
Curl (Radius)	—	≥4	m
Delivery Length	—	2.1 to 50.4	km/reel

Mechanical Characteristics

Parameter	Conditions	Value	Units
Proof Test	—	≥9.0	N
Proof Test	—	≥1.0	%
Proof Test	—	≥100	kpsi

Macro-bend Induced Attenuation

Parameter	Conditions	Value	Units
Macro-bend Loss	100 turns, 50 mm mandrel (1550 & 1625 nm)	≤0.05	dB
	10 turns, 30 mm mandrel (1550 nm)	≤0.1	dB
	10 turns, 30 mm mandrel (1625 nm)	≤0.3	dB
	1 turn, 20 mm mandrel (1550 nm)	≤0.1	dB
	1 turn, 20 mm mandrel (1625 nm)	≤0.5	dB

Mechanical Performance

Parameter	Conditions	Value	Units
Coating Strip Force (Typical)	—	1.7	N
Coating Strip Force (Peak)	—	1.3 – 8.9	N
Dynamic Stress Corrosion Parameter (nd)	—	≥20	—