HIOKI

3030-10

HiTESTER

Instruction Manual

April 2011 Revised edition 11
Printed in Japan
3030E981-11 11-04H

HIOKI
HIOKI E. E. CORPORATION
Headquarters
81 Koizumi, Ueda, Nagano 386-1192, Japan
TEL +81-268-28-0562 FAX +81-268-28-0568
E-mail: os-com@hioki.co.jp URL http://www.hioki.com/
(International Sales and Marketing Department)
HIOKI USA CORPORATION
TEL +1-609-409-9109
E-mail: hioki@hiokiusa.com URL http://www.hiokiusa.com
HIOKI (Shanghai) Sales & Trading Co., Ltd.
TEL +86-21-63910090 / 63910092
E-mail: info@hioki.com.cn URL http://www.hioki.cn
Beijing Representative Office:
TEL +86-10-84418761 / 84418762 E-mail: info-bj@hioki.com.cn
Guangzhou Representative Office:
TEL +86-20-38392673 / 38392676 E-mail: info-gz@hioki.com.cn
HIOKI INDIA PRIVATE LIMITED
TEL +91-731-4223901 / 4223902
E-mail: info@hioki.in URL http://www.hioki.in
HIOKI SINGAPORE PTE. LTD.
TEL +65-6634-7677 E-mail: info@hioki.com.sg 1104

Introduction

Thank you for purchasing the HIOKI "3030-10 HiTESTER". To obtain maximum performance from the instrument, please read this manual first, and keep it handy for future reference.
60014966B

Safety

⚠ DANGER

This instrument is designed to comply with IEC 61010 Safety Standards, and has been thoroughly tested for safety prior to shipment. However, mishandling during use could result in injury or death, as well as damage to the instrument. Be certain that you understand the instructions and precautions in the manual before use. We disclaim any responsibility for accidents or injuries not resulting directly from instrument defects.

■ Measurement categories (Overvoltage categories)

This instrument complies with CAT III safety requirements. To ensure safe operation of measurement instruments, IEC 61010 establishes safety standards for various electrical environments, categorized as CAT I to CAT IV, and called measurement categories.

CAT I: Secondary electrical circuits connected to an AC electrical outlet through a transformer or similar device.
CAT II: Primary electrical circuits in equipment connected to an AC electrical outlet by a power cord (portable tools, household appliances, etc.
CAT II covers directly measuring electrical outlet receptacles.
CAT III: Primary electrical circuits of heavy equipment (fixed installations) connected directly to the distribution panel, and feeders from the distribution panel to outlets.
CAT IV: The circuit from the service drop to the service entrance, and to the power meter and primary overcurrent protection device (distribution panel).

Using a measurement instrument in an environment designated with a higher-numbered category than that for which the instrument is rated could result in a severe accident, and must be carefully avoided.

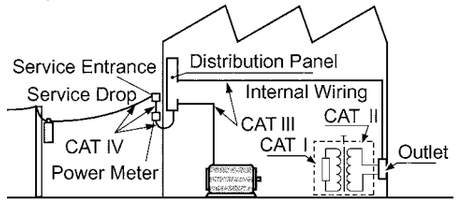

Fixed Installation

This manual contains information and warnings essential for safe operation of the instrument and for maintaining it in safe operating condition. Before using it, be sure to carefully read the following safety precautions.

■ Safety symbols

⚠	The ⚠ symbol printed on the instrument indicates that the user should refer to a corresponding topic in the manual (marked with the ⚠ symbol) before using the relevant function. In the manual, the ⚠ symbol indicates particularly important information that the user should read before using the instrument.
⏚	Indicates a grounding terminal.
⧈	Indicates a double-insulated device.
⎓	Indicates DC (Direct Current).
∼	Indicates AC (Alternating Current).

The following symbols in this manual indicate the relative importance of cautions and warnings.

⚠ DANGER	Indicates that incorrect operation presents an extreme hazard that could result in serious injury or death to the user.
⚠WARNING	Indicates that incorrect operation presents a significant hazard that could result in serious injury or death to the user.
⚠ CAUTION	Indicates that incorrect operation presents a possibility of injury to the user or damage to the instrument.
NOTE	Indicates advisory items related to performance or correct operation of the instrument.

Inspection

When you receive the instrument, inspect it carefully to ensure that no damage occurred during shipping. If damage is evident, or if it fails to operate according to the specifications, contact your dealer or Hioki representative.

Precautions ⚠

⚠ DANGER

- Observe the following precautions to avoid electric shock. Always verify the appropriate setting of the range selector switch before connecting the test leads. Disconnect the test leads from the measurement object before switching the range selector switch.
- Before taking a measurement, check the position of the range switch. Do not measure voltage outside the set voltage range or voltage at levels in excess of the measurement limit. Doing so may damage the instrument or cause an accident resulting in injury or death.
- Do not input voltage to the current measurement, resistance measurement, and battery test ranges. Doing so may damage the instrument or cause an accident resulting in injury or death.
  NOTE: The built-in fuse prevents a short-circuit in a power line resulting from a malfunction or misuse of the instrument. However, this built-in fuse protection is effective for up to 250 VAC commercial power input.
- If the end of a test lead short-circuits lines with a voltage between them, this is very dangerous and can lead to a serious accident. Exercise great care when measuring voltage.

⚠ WARNING

To prevent electric shock, do not allow the instrument to become wet and do not use the instrument when your hands are wet.

⚠ CAUTION

- If the protective functions of the instrument are damaged, either remove the instrument from service or post warnings to prevent others from using the instrument inadvertently.
- Note that the instrument may be damaged if voltage or current in excess of the measurement range is input.
- Do not store or use the instrument where it will be exposed to direct sunlight, high temperatures, high humidity, or condensation. If exposed to such conditions, the instrument may be damaged, the insulation may deteriorate, and the instrument may no longer satisfy its specifications.
- After use, always turn OFF the power.

NOTE

- If the meter pointer is not positioned in the 0 scale value, use the zero adjuster to adjust it correctly.
- If the fuse is blown, or the test leads are damaged, any range does not operate. To check the test leads wiring and fuse blowing, refer to "**3. Fuse and Test Leads Continuity Check**" in Battery and Fuse Replacement.
- If the meter cover becomes electrostatically charged, values may display incorrectly because of attractive forces on the needle. In this case, apply anti-static treatment to inhibit electrostatic charge buildup. The efficacy of such electrostatic treatments dissipates over time, so the treatment may need to be reapplied periodically.

Measurement Procedure ⚠

Pre-Operation Inspection

To avoid the possibility of electric shock or incorrect measurement, check the following items before using the instrument.

⚠ WARNING

- Use only the supplied Model L9207-30 TEST LEAD.
- Before using the instrument, make sure that the insulation on the test leads is undamaged and that the white or red portion (insulation layer) inside the cable is not exposed. Using the instrument in such conditions could cause an electric shock, so contact your dealer or Hioki representative for replacements.
  (Model L9207-30 TEST LEAD)

- For voltage measurement, short the test leads and check that 0 V is indicated.
- For resistance measurement, short the test leads and adjust the reading to zero using the zero ohm adjuster (0 Ω ADJ knob).
- Measure a test item with a known value (battery, AC supply, resistor, etc.) to check that the instrument is functioning correctly.

Voltage Measurement (AC, DCV)

⚠ DANGER

The maximum input voltage is 600 V DC/AC. Attempting to measure voltage in excess of the maximum input could destroy the instrument and result in personal injury or death.

⚠ CAUTION

Removable sleeves are attached to the metal pins at the ends of the test leads.
To prevent a short circuit accident, be sure to use the test leads with the sleeves attached when performing measurements in the CAT III measurement category.
Remove the sleeves from the test leads when performing measurements in the CAT I and CAT II measurement categories.
For details on measurement categories, see "Measurement categories" in the instruction manual.
When performing measurements with the sleeves attached, be careful to avoid damaging the sleeves. If the sleeves are inadvertently removed during measurement, be especially careful in handling the test leads to avoid electric shock.

1. Set the range switch to the ACV or DCV range proper for the voltage to be measured.
NOTE: If the voltage value is unclear, initially set the range switch to the 600 V range, and after obtaining a reading in this range, change to the range proper for the voltage value.
2. Connect the black test lead to the - terminal, and the red one to the + terminal.
3. Connect the test leads to the circuit to be measured in parallel, then read the results on the AC/DC scale. When the DCV is selected, if connecting the red test lead to the positive side, and the black one to the negative side, then the pointer deflects normally.
NOTE: When changing the range, disconnect the test leads from the object to be measured.

Measurement example
- The voltage measurement of the outlet
- Function ∼ V
- Range 120 V
- Scale DC/AC 12
- Measurement value 100 V

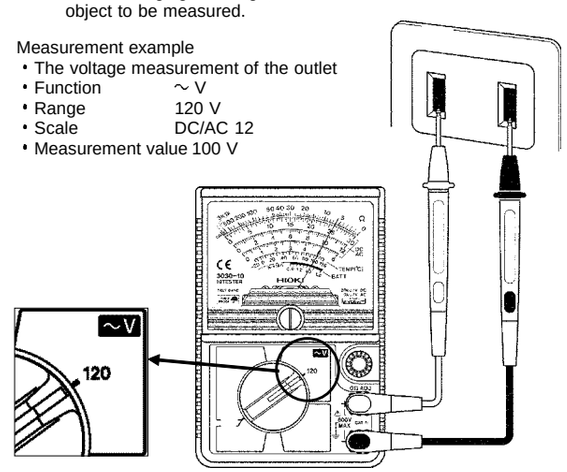

Current Measurement (DCmA, 60 μADC)

⚠ DANGER

Do not apply a voltage while a current range is selected. Applying a voltage may result in damage to the instrument, or a serious accident.

⚠ WARNING

- To avoid electrical shock, do not use the instrument to measure current in circuits of 250 V or greater. The current function overload protection trips at 250 Vrms.
- To prevent electrical accidents, turn the power off before connecting the test leads and then take measurements.

1. Set the range switch to the DCmA or 60 μA range.
NOTE: If the current value is unclear, initially set the range switch to the 300 mA DC range, and after obtaining a reading in this range, change to the range proper for the current value.
2. Connect the black test lead to the - terminal, and the red one to the + terminal.
3. Connect the instrument to the electrical line to be measured in series (to the cut off line). Connect it so that current flows from the red test lead to the black one. (If connecting it reversely, the pointer deflects in the reverse direction.)
NOTE: When changing the range, disconnect the test leads from the object to be measured.
4. Read the result on the AC/DC scale.

Measurement example
- The current measurement that it flows for the load 10 Ω.
- Function: ⎓ A
- Range: 300 mA
- Scale: DC/AC 30
- Measurement value: 150 mA

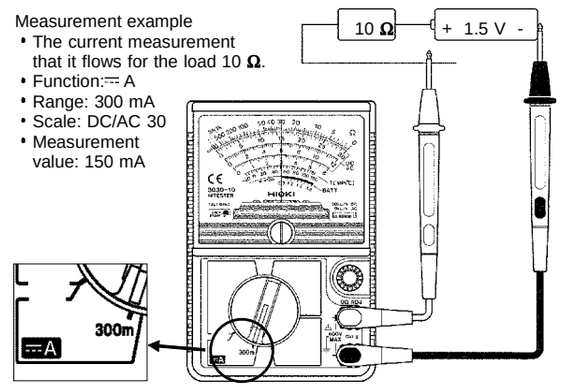

Resistance Measurement (Ω)

⚠ DANGER

Do not input voltage to the resistance measurement functions. Doing so may damage the instrument or cause an accident resulting in injury or death.

⚠ WARNING

Turn off the power and discharge the capacitors before measuring resistance in a circuit.

1. Set the range switch to the proper Ω range.
   Accurate measurement can be made by selecting a range where the reading will be about the center of the range.
2. Connect the black test lead to the - terminal, and the red one to the + terminal.
3. Short the test leads, and use the zero ohm adjuster (0 ΩADJ knob) to adjust the pointer to the 0 Ω scale.

NOTE: If the pointer cannot be adjusted to the 0 Ω scale, replace the battery.

4. Connect the test leads to the circuit to be measured, and read the value from the scale.

NOTE: When changing the range, disconnect the test leads from the object to be measured.
For resistance measurement, the indication may be unstable if the ends of the test leads are dirty, and the contact is poor. If the indication is unstable, increase the contact pressure, or clean the ends of the test leads by wiping with alcohol or similar solvent.

5. In order to obtain the true value, it is necessary to multiply the reading shown by the factor for the range in use.

Measurement example
- 5.1kΩ resistance measurement
- Function x10
- Scale Ω
- Measurement value 5.1 kΩ

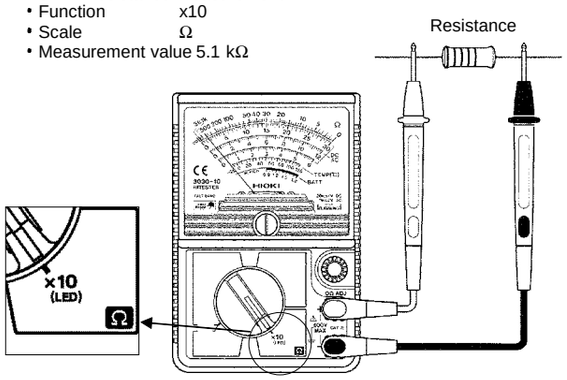

LED Check (Lighting Test)

1. Set the range switch to the Ω x 10 (LED) range.
2. Connect the test leads to both sides of the LED to be tested.
3. The LED has polarity, so unless it light in 2., try reversing the test leads connections.
4. When it lights, the pointer deflect, however a reading has no meaning.

NOTE: The internal battery of the Ω meter has positive polarity in the - terminal. Therefore, it is right to connect the red (+) test lead to the cathode side of the LED, and the black (-) one to the anode side.

Temperature Measurement
(Use the optional 9021-01 THERMISTOR TEMPERATURE PROBE.)

1. Set the range switch to the Ω function, R x 10 (TEMP) range.
2. Connect the two black plugs of the three plugs of the temperature probe to the + and - terminals.
3. Use the zero ohm adjuster (0 Ω ADJ knob) to adjust the pointer to the 0 Ω scale.
4. After 0 Ω adjustment, change the plug in the + terminal to the red plug.
5. Connect the temperature probe tip to the measurement place, and read the value from the temperature scale.

⚠ CAUTION

Be careful to avoid touching the removed plug with any other objects.

REFERENCE The time for indication and measured temperature vary depending on the condition of heat conduction to the probe.

Battery test (BATT 1.5 V)

⚠ DANGER

Do not apply a over-voltage while a BATT 1.5 V range is selected. Applying a over-voltage may result in damage to the instrument, or a serious accident.

1. Set the range switch to the BATT 1.5 V range.
2. Connect the black test lead to the - terminal, and the red one to the + terminal.
3. Connect the test leads to both sides of the battery to be measured (the red test lead to the positive side and the black one to the negative side), and read the measurement value.
   Removed a battery from a set as much as possible, and measure it alone.

REFERENCE This measures the voltage with a 150 mA (load resister 10 Ω) current in order to measure the battery when it is being used.
When this is compared with measurement in the 3 V DC range (no-load voltage value), the lower voltage value is indicated for the more consumed battery.

Measurement example
- 1.5V battery deterioration examination
- Function BATT
- Scale BATT
- Measurement value 1.5 V

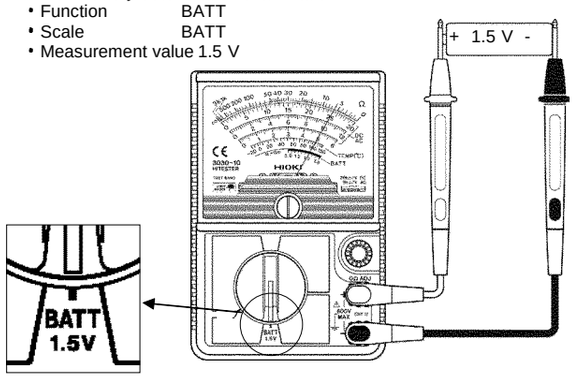

Battery and Fuse Replacement

⚠ WARNING

To avoid electric shock when replacing the batteries and fuse, first disconnect the test leads from the object to be measured. Also, after replacing the batteries, fuse, always replace the case before using the instrument.

Removing the case back

1. Remove the fixing screw.
2. Remove the case back from the upper part.
3. Replace the batteries and fuse.
   - Insert the batteries with the polarity correct as per the battery indication

Attaching the case back

3. Fasten the fixing screw.
2. Attach the upper part.
   - If the metal fittings for the batteries and fuse are damaged, it does not fit.

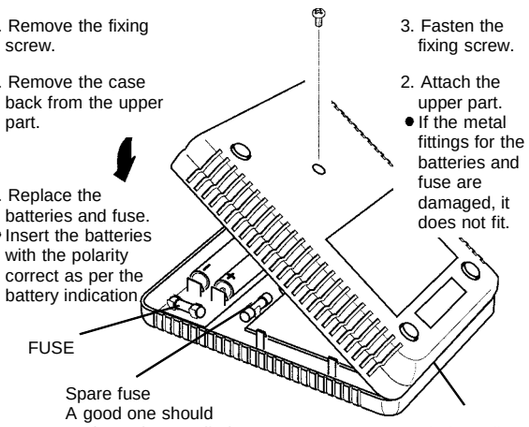

1. Fit the nail on the edge of the lower part.

1. Battery Replacement

⚠ WARNING

- Do not mix old and new batteries, or different types of batteries. Also, be careful to observe battery polarity during installation. Otherwise, poor performance or damage from battery leakage could result.
- Battery may explode if mistreated. Do not short-circuit, recharge, disassemble or dispose of in fire.
- Handle and dispose of batteries in accordance with local regulations.
- To avoid corrosion from battery leakage, remove the batteries from the instrument if it is to be stored for a long time.

1. Remove the case back.
2. Replace the batteries with new ones.
3. Attach the case back.

2. Fuse Replacement

⚠ WARNING

- Only use fuses of the specified type that is rated for the specified current and voltage. Using a fuse that does not meet the specifications, especially of large current capacity (including a short circuit of the copper wire) may not cause the shut-off function to operate, and result in burning, a short circuit, or injury or death.
- Fuse specification: F0.5 AH/250 V, with non-arcing protection, 20 mm x 5 mm dia.

1. Remove the case back.
2. Replace the fuse with a new one.

NOTE: A spare fuse is provided inside the instrument as shown.
Be sure to supply a new spare fuse if the spare fuse is used to replace a blown fuse.

3. Attach the case back.

3. Fuse and Test Leads Continuity Check

1. Connect the black test lead to the - terminal, and the red one to the + terminal.
2. Set the range switch to the Ω x 1 k range, and short the test leads.
3. If the pointer deflects, the fuse and test leads conduct (are not blown and damaged).
   If the pointer does not deflect, the test leads may be damaged. Check again after replacing the fuse.

Specifications (*mark: shared range)

DCV	*0.3/3/12/30/120/300/600 V, 20 kΩ/V (0.3 V:16.7 kΩ/V), ±2.5% of f.s. reading
ACV	12/30/120/300/600 V, 9 kΩ/V, ±2.5% of f.s. reading (12 V: ±4%)
DCA	*60 μA, 30/300 mA, internal voltage drop (nominal value) 300 mV, ±3% of f.s. reading
Ω	0 to 3 kΩ, central scale 30 Ω, R x 1/R x 10/R x 100/R x 1 k, ±3% of scale length
BATT	0.9 to 1.8 V, load resistance 10Ω, ±6% of f.s. reading
Temperature scale	-20 to 150℃ (standard), -20 to 300℉ (for USA only), ±3% of scale length (with the optional 9021-01 THERMISTOR TEMPERATURE PROBE)
Protective system	Short circuit protection of power line by fuse (up to 250 VAC commercial power input) NOTE: This system is not for protecting the instrument from damage but for securing safety. Overload protection of meter device by diode
Meter	Internally magnetized taut band
Fuse	F0.5 AH/250 V, 20 mm x 5 mm dia. (non-arcing type), Internal resistance Approx. 0.866 Ω
Drop proof	One meter to concrete
Standards applying	Safety EN 61010 Measurement Category III (anticipated transient overvoltage 6000 V), Pollution Degree 2 EMC EN 61326
Power supply	Rated power voltage 1.5 VDC x 2, R6P manganese battery x 2
Maximum rated power	0.36 VA
Location for Use	Altitude up to 2000 m, Altitude up to 6562 feet, indoors
Dimensions and mass	Approx.95W x 141H x 39D mm, Approx.280 g Approx.3.74"W x 5.55"H x 1.54"D, Approx.9.9 oz.
Operating temperature and humidity	0 to 40℃, 32 to 104℉, 80% RH max.
Storage temperature and humidity	-10 to 50℃, 14 to 122℉, 80% RH max.
Period of guaranteed accuracy	1 year
Maximum input voltage	600 VAC/DC
Accessories	L9207-30 TEST LEAD Spare fuse (F0.5 AH/250 V, 20 mm x 5 mm dia., non-arcing type) R6P (⎓1.5 V) manganese battery (2) Instruction Manual 9390 CARRYING CASE
Optional accessory	9021-01 THERMISTOR TEMPERATURE PROBE

Maintenance

Gently wipe dirt from the surface of the instrument with a soft cloth moistened with a small amount of water or mild detergent.
Do not try to clean the instrument using cleaners containing organic solvents such as benzine, alcohol, acetone, ether, ketones, thinners, or gasoline. They may cause discoloration or damage.

Service

If the instrument is not functioning properly, check the batteries, the test leads wiring, and fuse blowing. If a problem is found, contact your dealer or HIOKI representative. Pack the instrument carefully so that it will not be damaged during transport, and write a detailed description of the problem. HIOKI cannot bear any responsibility for damage that occurs during shipment.

Part Names

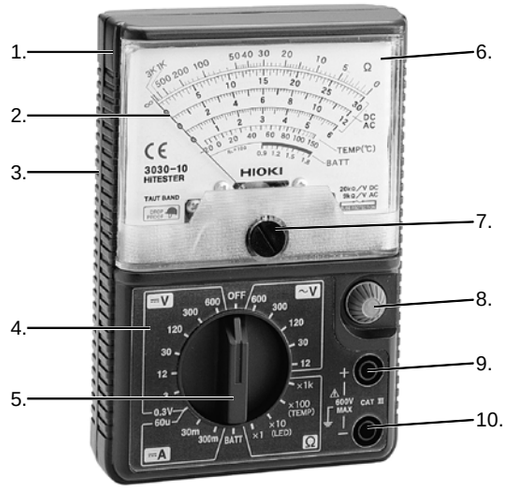

Meter Nomenclature
1. Panel 2. Pointer 3. Case back 4. Face plate
5. Range selector switch 6. Scale plate 7. Zero adjuster
8. Zero ohm adjuster 9. Positive (+) terminal
10. Negative (-) terminal

HIOKI

DECLARATION OF CONFORMITY

Manufacturer's Name: HIOKI E.E. CORPORATION
Manufacturer's Address: 81 Koizumi, Ueda, Nagano 386-1192, Japan

Product Name: HiTESTER
Model Number: 3030-10
Accessory: L9207-30 TEST LEAD

The above-mentioned products conform to the following product specifications:
Safety: EN61010-1:2001
EN61010-031:2002+A1:2008
EMC: EN61326-2-2:2006
Class B equipment
Portable test, measuring and monitoring equipment used in low-voltage distribution systems

Supplementary Information:
The products herewith comply with the requirements of the Low Voltage Directive 2006/95/EC and the EMC Directive 2004/108/EC.

HIOKI E.E. CORPORATION

10 September 2010

Atsushi Mizuno
Director of Quality Assurance
3030E999-10